DUBAI WALL CLADDING

PRODUCT SPECIFICATION
dubaiwallcladding.com

Ascot White PVC Skirting

DWC-DS93-043 | PVC Skirting Collection



Square cap over a narrow inset band and a plain lower face.

90 mm height with a 13 mm maximum depth.



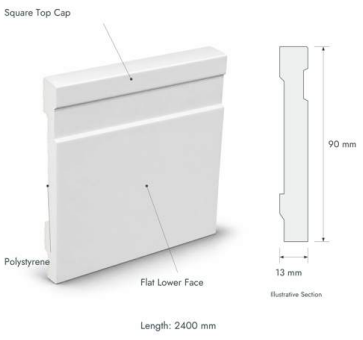

SPECIFICATIONS

Material
Polystyrene (PS)

Colour
White

Profile
Square cap and inset band

Length
2400 mm

Height
90 mm

Thickness
13 mm

Section drawing:
Illustrative; verify with sample

PRODUCT PRICE
AED 35 / sqm

Confirm final quantity and quotation →

WhatsApp +971 56 452 4245 info@dubaiwallcladding.com