DUBAI WALL CLADDING

PRODUCT SPECIFICATION
dubaiwallcladding.com

Trent White PVC Skirting

DWC-DS123-045 | PVC Skirting Collection



Rounded top return above a recessed band and flat face.

120 mm height with a 20 mm maximum depth.



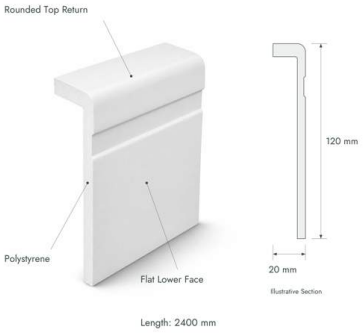

SPECIFICATIONS

Material
Polystyrene (PS)

Colour
White

Profile
Top return and inset band

Length
2400 mm

Height
120 mm

Thickness
20 mm

Section drawing:
Illustrative; verify with sample

PRODUCT PRICE
AED 40 / sqm

Confirm final quantity and quotation →

WhatsApp +971 56 452 4245 info@dubaiwallcladding.com